mageba USA	TENSA®GRIP Type RS-P3 (mageba USA Standard)		Mageba USA LLC New York, NY: 212-653-8813 San Jose, CA: 408-281-9700 www.magebausa.com

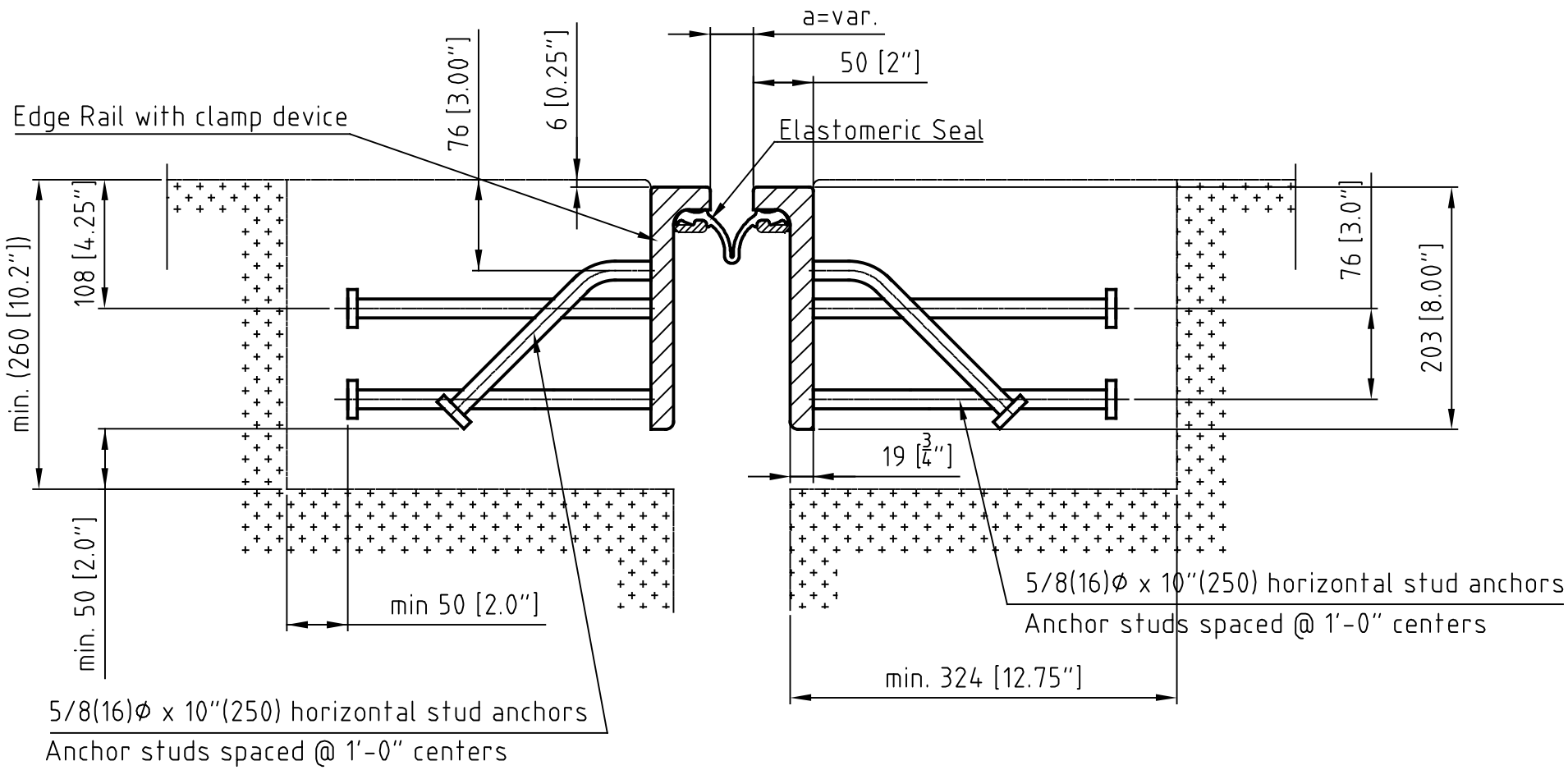

TENSA GRIP RS-P3 (mageba USA Standard)	Rev. 01	05.04.2012	Prepared: RMI	Reviewed: PME	Approved: GMO	Scale: 1:3